Available online at www.sciencedirect.com
SCIENCE DIRECT®
Journal of Power Sources 154 (2006) 379–385
JOURNAL OF POWER SOURCES
www.elsevier.com/locate/jpowsour

Diesel fuel processor for PEM fuel cells: Two possible alternatives (ATR versus SR)

A. Cutillo, S. Specchia*, M. Antonini, G. Saracco, V. Specchia

Dipartimento di Scienza dei Materiali ed Ingegneria Chimica, Politecnico di Torino, Italy

Available online 28 November 2005

Abstract

There are large efforts in exploring the on-board reforming technologies, which would avoid the actual lack of hydrogen infrastructure and related safety issues. From this view point, the present work deals with the comparison between two different 10 kW_e fuel processors (FP) systems for the production of hydrogen-rich fuel gas starting from diesel oil, based respectively on autothermal (ATR) and steam-reforming (SR) process and related CO clean-up technologies; the obtained hydrogen rich gas is fed to the PEMFC stack of an auxiliary power unit (APU). Based on a series of simulations with Matlab/Simulink, the two systems were compared in terms of FP and APU efficiency, hydrogen concentration fed to the FC, water balance and process scheme complexity. Notwithstanding a slightly higher process scheme complexity and a slightly more difficult water recovery, the FP based on the SR scheme, as compared to the ATR one, shows higher efficiency and larger hydrogen concentration for the stream fed to the PEMFC anode, which represent key issues for auxiliary power generation based on FCs as compared, e.g. to alternators.
© 2005 Elsevier B.V. All rights reserved.

Keywords: Diesel fuel processor; Autothermal reforming; Steam reforming; PEM fuel cells; APU

1. Introduction

The worldwide demand for energy is growing more and more. The European "World Energy Technology and Climate Policy Outlook" (WETO) predicts an average growth rate of 1.8% per year for the period 2000–2030 for primary energy worldwide [1]. The increased demand will be met largely by reserves of fossil fuel that emit either greenhouse gasses or other pollutants. These reserves are diminishing and will become increasingly expensive. Moreover, safety in handling energy is a major issue. A sustainable high quality of life is the basic driver for providing a clean, safe, reliable and secure energy supply in Europe. To ensure a competitive economic environment, energy systems must meet the following societal needs at affordable prices:

(i) mitigate the effects of climate change;
(ii) reduce toxic pollutants;
(iii) plan for diminishing reserve of oil.

Measures should therefore be introduced which promote:

(i) more efficient use of energy;
(ii) energy supply from a growing proportion of carbon-free sources;
(iii) transition technologies to reach the full hydrogen economy.

The ever-increasing attention on the hydrogen utilisation as energy vector verifies the energetic transition theory postulated by Hefner [2] for the age of energy gases. But the intensive hydrogen utilisation must win still some challenges, concerning safety and infrastructure. About the first point, in literature, there are different studies on the risk-free storage of hydrogen like the adsorption on platelet-carbon fibres [3] and bundles of carbon nanotubes [4]. The infrastructure growth is very slow due to the actual moderate hydrogen demand, but the future large scale hydrogen utilisation is delayed by infrastructure lack: their necessary parallel growth seems very slow.

Concerning road transport, in a short-term the on-board hydrogen production represents a valid alternative to win these challenges: about safety, the stocked fuel is liquid and, moreover, it can be supplied by the actual infrastructure. In this perspective, on-board hydrogen production has gained large importance for fuel cells applications, as vehicles power traction or auxiliary power units (APU) and it represents a good transition way to reach the aim of the hydrogen economy in mobile applications.

* Corresponding author. Tel.: +39 011 5644608; fax: +39 011 5644699.
E-mail address: stefania.specchia@polito.it (S. Specchia).

0378-7753/$ – see front matter © 2005 Elsevier B.V. All rights reserved.
doi:10.1016/j.jpowsour.2005.10.065

A fuel cell is an ideal device to generate electricity from either fossil or renewable fuels: it is a clean and efficient energy supply system. By using fuel cell propulsion running on hydrogen the vehicle has (local) zero emission. For fuel cell with fuel processing technology used for propulsion (up to 80 kW_e) or APU (up to 10 kW_e) major air pollutants such as nitrogen oxides, carbon monoxide and volatile organic compounds (VOC) will be substantially reduced. Carbon dioxide release will also be reduced because of the energy efficiency, considerably higher than those of internal combustion engines (ICE) or of alternators. This will provide a practically clean form of power generation for both mobile and stationary applications and therefore aid European countries to meet the Kyoto Protocol [5] on the reduction of EU green house gases by 8% in 2008 and beyond the Kyoto deadline of 2010.

The EU Directive 98/70/EC lays down limits for exhaust gases from passenger car and light commercial vehicles to be attained by 2005 (EURO IV), as well as fuel quality requirements. Moreover, in order to reduce carbon dioxide emissions, cuts to consumption of resources and mitigation of noise from road traffic are promoted. The potential for higher efficiency and zero (or near-to-zero) emissions vehicle has kindled more and more interest to fuel cell as an alternative propulsion system to ICE. Exhaust gases from road traffic cause a whole range of environmental problems: nitrogen oxides are among the causes of forest dieback and, together with hydrocarbons emitted by motor vehicles, are precursors of photo-oxidants, which give rise to photochemical smog; benzene and diesel particulates are carcinogenic substances whose high concentration, particularly in the vicinity of heavily used roads in metropolitan areas, causes ever growing concern. In this context, research and development of diesel oil reforming systems for fuel processors, has gained a prevalent role in the perspective of solving these problems.

The hydrogen production system, directly on-board of the vehicle, will be named hereafter fuel processor (FP): the fuel reforming primary step is followed by a series of other catalytic steps suitable for both increasing the H_2 amount in the reformate gas and CO removal. Hydrogen production by hydrocarbons can be carried out mainly by two reactions: steam reforming (SR) [6] and partial oxidation (POX) [7]:

- SR reaction:

$$C_nH_m + nH_2O \rightarrow nCO + (n + 0.5\,m)H_2$$

- POX reaction:

$$C_nH_m + 0.5nO_2 \rightarrow nCO + 0.5\,mH_2$$

The SR reaction is endothermic, thus it needs external heat addiction; conversely, the POX reaction is exothermic but it produces a gas containing less hydrogen. The third possibility is to combine in several ratios the two SR and POX reactions, in order to perform an autothermal reforming (ATR) process. In this particular case, a suitable O_2/H_2O ratio makes the reaction isothermal and self-sustaining.

The present work deals with a comparative analysis, based on simulations carried out with the Matlab/Simulink software, of hydrogen production systems through autothermal reforming (ATR) and steam reforming (SR) starting from diesel fuel. The goal is to determine the most convenient solution (in terms of efficiency, hydrogen concentration fed to FC, water balance and process scheme complexity) to be adopted in a 10 kW_e FP for PEMFC. A subsequent simulation analysis will consider a 10 kW_e FP equipped with innovative PEMFCs, capable to tolerate very high levels of carbon monoxide (overall magnitude of order: thousands of ppm) at the price of a slightly lower FC efficiency: a comparison between the two series of analysis will be finally carried out for steady-state operations.

The diesel oil composition is not constant, as it is a function of starting crude oil source: it consists of numerous components and no single compound predominates [8]. Therefore, for the sake of simplicity in the search of chemical and physical properties, cetane ($C_{16}H_{34}$) was assumed in this work as the compound representative of the diesel fuel oil.

2. Fuel processors and models description

The main reactor of a FP system is the reformer, which produces a hydrogen rich gas. Most studies on autothermal reforming (ATR) catalyst suggest the contemporary use of steam-reforming (with catalysts based on Ni [9]) and oxidation reactions (with catalysts based on Pt [10], Rh, Co [11], Pd [12]). The commercial steam-reforming (SR) catalysts are supported on Al_2O_3 and $MgAl_2O_4$, but also other supports have been proposed (perovskites, SiO_2–Al_2O_3, SiO_2–ZrO_2, H–Y zeolites, MgO, La_2O_3, CeO_2–ZrO_2 [11]). The two reactions take place at high temperature (700–800 °C).

In both cases (ATR and SR), the reformate gas mixture contains large CO quantities, a poison for the electro-catalysts of actual PEMFCs anode, able to operate with no more than 10 ppm of CO (50 ppm as pick levels). For this purpose it is necessary to adopt, immediately after the hydrogen production unit (ATR or SR reformer), a CO clean-up system. This unit generally consists of:

(i) two water–gas shift reactors (WGS: $CO + H_2O \rightarrow CO_2 + H_2$) which reduce the CO concentration down to 3.000 ppm [13,14] thanks to water addiction; moreover, they simultaneously produce further hydrogen;
(ii) a final reactor of CO preferential oxidation (CO-PROX: $CO + 0.5O_2 \rightarrow CO_2$), capable to completely removing the CO under the limit of 10 ppm [15,16] thanks to the addiction of a small air flow rate, but reducing a bit the total amount of hydrogen due to its concomitant unavoidable direct oxidation.

WGS technology is very well established for reducing CO concentrations in hydrogen containing gases coming from large steady-state operations. The present practice in industry is to carry out the WGS in two stages: the first one operating at high temperature (350–450 °C) with iron-based catalyst, the second one working with a copper–zinc catalyst at lower temperature

(200–250 °C), because WGS reaction is thermodynamically advantaged at low temperatures, but its kinetics is improved by increasing temperature. Finally, the CO-PROX method is the most promising and economic approach as further step of CO clean-up: the available temperature operating range for the CO-PROX reactor is 80–270 °C; the most promising CO-PROX catalysts can now operate in the range 130–200 °C [17].

In the performance study of a diesel FP and in particular for the efficiency evaluation, heat recovery assumes large importance: the maximisation of heat recovery is mandatory to achieve top system efficiency. As a PEMFC can exploit about 80% of the hydrogen produced, the remaining part can be burned to recover thermal energy: this is a very important heat source of the system, but not the only one. The series of cascade reactors work at different decreasing temperatures: the excess heat from one reactor outlet to the subsequent reactor inlet might also be recovered. Moreover, in the FP analysis, particular attention has been paid to the water balance: water is required in the reforming reactor and for injections before the CO clean-up reactors; therefore, water needs to be recovered from the FP itself to render its balance self-sustaining.

The FP efficiency is defined as the ratio between the power of the produced hydrogen flow rate based on its lower heating value ($LHV_{H_2} = 243.5\,kJ\,mol^{-1}$) and that of the fed fuel flow rate based on its LHV ($LHV_{cetane} = 9.96\,MJ\,mol^{-1}$). The total system APU efficiency is indeed defined as the ratio between the electric power generated and that of the used fuel based on its LHV. For PEMFCs with no CO tolerance (10 ppm as maximum limit), the FC efficiency is about 50%, thus the electric power generated is given from the following formula:

$$P_e = \eta_{anode}\eta_{FC}\dot{m}_{H_2}\,LHV_{H_2}$$

where η_{anode} is the percentage of the feed hydrogen used at the FC anode ($\eta_{anode} = 0.8$) and η_{FC} is the efficiency of the FC ($\eta_{FC} = 0.5$). The on-going research and development will bring to innovative MEAs for PEMFC capable of tolerating higher CO concentrations (thousands of ppm), thanks to more active electro-catalysts and membranes [18]. In this case, the FC efficiency has unfortunately to withstand a small decrease and might therefore be considered equal to 47%.

In the APU efficiency the parasitic powers of air compressor and pumps (for primary fuels and water), which can consume, on average, up to 15–20% of the produced electric energy (80–85% of the parasitic power due to the compressor), were not considered. The necessary auxiliary items for the FP, characterized by small flow rates, are at the moment not commercially available on the market. Oversized items, especially for the air compressor, would worsen the APU efficiency.

2.1. FP based on autothermal reforming (ATR) system

The scheme of FP based on ATR is shown in Fig. 1. The FP model consist of a diesel-reforming unit (REFORMER block), a high-temperature water–gas shift unit (HTWGS block), a low-temperature water–gas shift unit (LTWGS block) and a CO-preferential oxidation unit (CO-PROX block). Moreover, the model is completed by the afterburner (AFB block), various heat exchangers (HX blocks) for the thermal energy recovery,

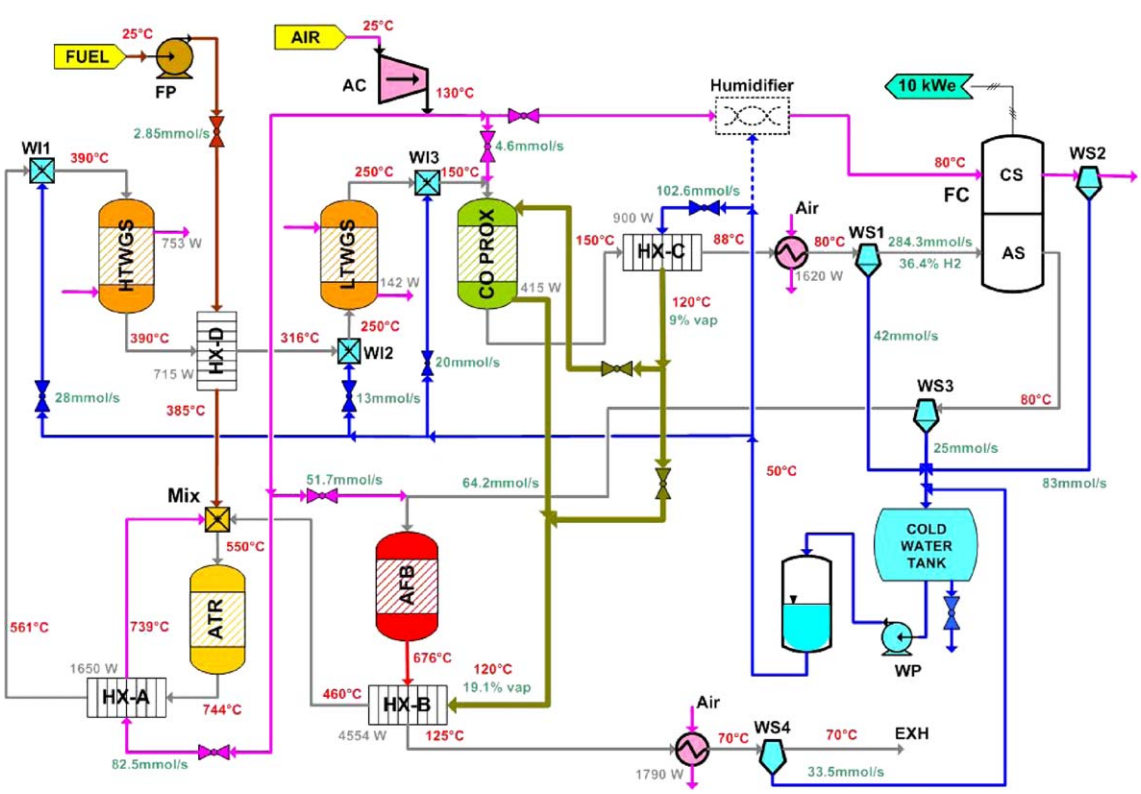

Fig. 1. Scheme of the diesel FP based on ATR with indications about local temperatures and flow rates.

various water injections (WI blocks) and water separators (WS blocks) for a proper water management of the whole system. Molar and energy balances are solved in each block as well as in the overall system.

For the diesel oil reforming, the basic assumption considers that the reformer unit converts a mixture of water, air and diesel into a hydrogen-rich stream containing H_2, H_2O, CO, CO_2 and N_2. Water, air and diesel streams are fed to the reforming unit with a steam-to-carbon ratio equal to 2.25 and an oxygen-to-carbon ratio equal to 0.38. The compressor supplies air for both the reformer and FC; the external air upstream the compressor has been assumed at 25 °C and with a medium relative humidity value; therefore the relative air humidity downstream the compressor is really low. This might result in a non-favourable condition for the water recovery from the exhaust cathode air stream. Feeding humidified air to the FC cathode side turns definitely into an advantage for the water balance, since a larger quantity of water may be recovered from the exhaust cathode air. Therefore, the simulation considers saturated air for the FC cathode side, without taking into account this condition is attained. On the other hands, the air humidification reached on the basis of the increased air enthalpy for the compression by directly spraying a suitable rate of the recovered water (as drawn with dotted lines in Fig. 1) until the FC working temperature is reached, is only a water internal loop with no consequences on the water balance.

The model assumes that the partial combustion reaction runs to complete oxygen consumption ($C_{16}H_{34} + 8O_2 \rightarrow 16CO + 17H_2$) and the steam-reforming reaction runs to complete diesel consumption ($C_{16}H_{34} + 16H_2O \rightarrow 16CO + 33H_2$). The reformer outlet gases are supposed to reach the thermodynamic equilibrium and the model evaluates their outlet temperature and equilibrium composition. Subsequently, the WGS reaction runs to the equilibrium conditions ($CO + H_2O \leftrightarrow CO_2 + H_2$), as well, and the following WGS equilibrium constant [19] is used in the model:

$$K_P = \exp\left(\frac{4577.8}{T} - 4.33\right)$$

The hydrogen-rich reformer outlet gas, before entering the HTWGS unit, transfers its heat to the reformer air inlet flow (the HTWGS inlet temperature is controlled by WI). The stream coming out from the HTWGS unit is cooled by the diesel fuel oil; the latter evaporates and is afterwards mixed with the steam and the air coming into the reforming section. Both the WGS reactors are modelled supposing they work isothermally and reach the thermodynamic equilibrium. The flow generated by the LTWGS must be cooled down to 150 °C before entering the CO-PROX unit ($CO + 0.5O_2 \rightarrow CO_2$): a water injection in this case allows easier and better control of the inlet temperature. The model considers an isothermal CO-PROX reactor and a complete oxygen conversion with constant oxygen selectivity to CO oxidation in the CO-PROX block of 33% [20]; as a consequence, for each molecule of reacted CO two molecules of hydrogen are lost. The stream coming out from the CO-PROX unit must be cooled down to 80 °C before entering the FC anode side: to avoid temperature pinch points in the recovery heat exchanger, only part of the recoverable heat is used to pre-heat the ATR feed water. This one, before being completely evaporated with the hot exhaust gases from the after-burner (AFB), is employed to maintain the CO-PROX reactor isothermal. The hydrogen unused at the anode side of the FC is recovered as fuel for the AFB. Summarizing, water is necessary for the ATR reactor, the two WGS reactors (in both cases to thermodynamically favour the reactions and to better control the reactor inlet temperature) and before the CO-PROX reactor (to reduce the reactor inlet temperature). For a proper overall water management, the condensed water before and after the FC anode side, and that after the FC cathode side must be collected. As the amount of these three water streams is less than the needed one, it is necessary to cool down the AFB exhaust gases with an air radiator to recover an additional water amount. A conservative temperature value of 70 °C for the radiator outlet AFB exhaust gases allows to easily satisfy the overall water balance. For sake of simplicity, in the model calculations the whole system is considered to be operated at 2 ata.

2.2. FP based on steam-reforming (SR) system

The scheme of FP based on SR is shown in Fig. 2. The SR model is similar to the ATR one, but only the steam-reforming reaction takes place in this case. Water and diesel streams are fed to the reforming unit with a steam-to-carbon ratio equal to 3.0. The SR outlet gas is in thermodynamic equilibrium. The main difference between the two situations is represented, obviously, by the reforming unit. As the SR reaction is endothermic, heat must be supplied. Since the thermal power generated by the combustion of hydrogen off-gas from the FC anode is not sufficient, a limited diesel fuel flow rate has to be burnt in the AFB, to assure the required heat to the SR unit. The best technological configuration so far available on the market allows to integrate in a single multifunctional item the catalytic AFB and the catalytic SR reactor, to maximise the heat exchange efficiency: thanks to a progressive fuel feeding along the AFB, the risk of hot spot formation is greatly reduced. Two main advantages can be thus reached:

1. the temperature profile through the AFB is almost constant;
2. the AFB catalyst is preserved from synthering effects, due to hot spots.

The remaining part of the system (HTWGS, LTWGS and CO-PROX units) has been kept very similar to the ATR one, in order to draw a comparison of the two FPs in contexts as similar as possible.

3. Results and discussion

Two FP models have been developed and coded in Matlab/Simulink so as to compare them in terms of efficiency, hydrogen concentration fed to FC, water balance and process scheme complexity. Aimed efforts were done to obtain two similar systems, with the only main difference related to the reforming unit, but trying to optimise the efficiency of both systems. As mentioned above, all the simulations were

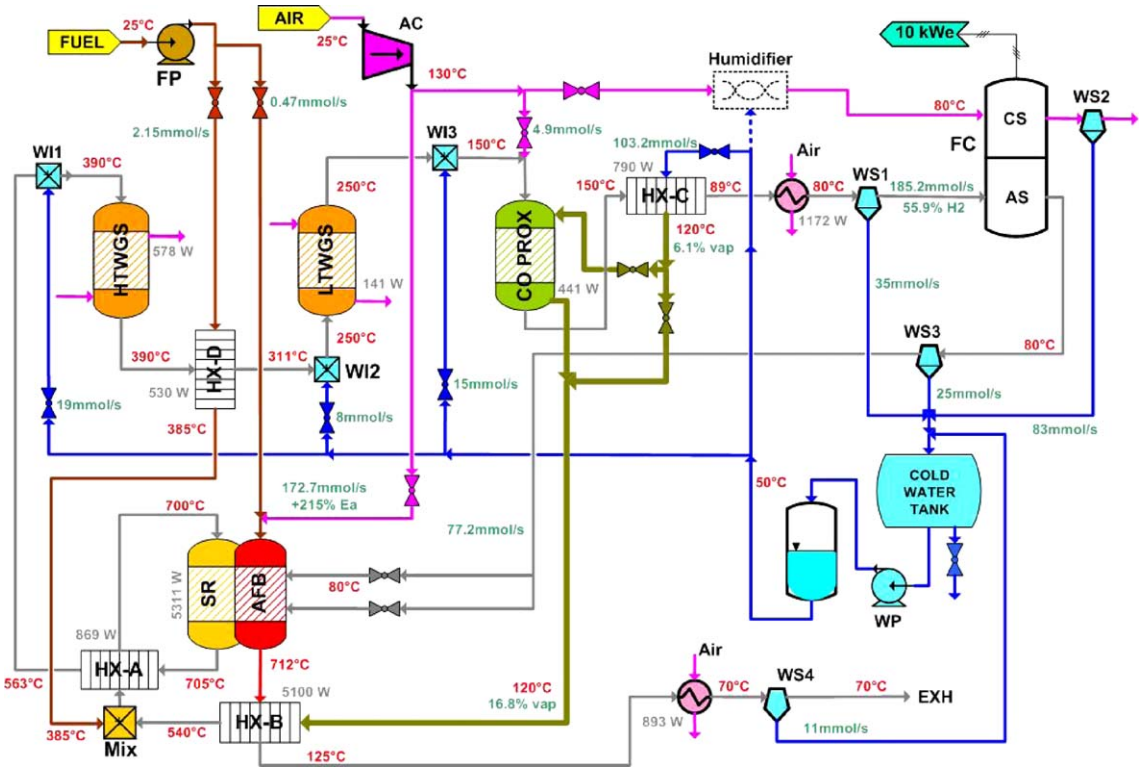

Fig. 2. Scheme of the diesel FP based on SR with indications about local temperatures and flow rates.

focused to obtain 10 kW_e as electric APU output and the presented results refer to simulations carried out in steady-state conditions.

The comparison of the total inlet molar flows (diesel fuel, air and water) is shown in Table 1: it can be noticed that the diesel fuel demand for the ATR scheme is 2.85 mmol s^{-1}, as opposed to 2.62 mmol s^{-1} for the SR scheme. The FP scheme based on SR reactor requires less diesel fuel (about 8%) and water (about 11%) to generate 10 kW_e, but a higher amount of air (about 21.8%). The air flow to the FC cathode has been determined assuming a cathode stoichiometry equal to 2.

The comparison of the gas flows composition (H_2, CO, H_2O, CO_2 and N_2) through the reactors cascade (ATR/SR reformer, HTWGS, LTWGS, CO-PROX, FC) is shown in Table 2: it can be noticed that the anode side PEMFC inlet flow from the ATR system contains 36.4 vol.% H_2, against 55.9 vol.% H_2 from the SR one. From the fuel cell point of view, such higher H_2 volume percentage is an advantage, allowing a performance improvement, e.g. the MEA voltage increases and therefore the number of MEAs in the PEMFC stack decreases.

Table 1
Comparison of the inlet flow rates for the ATR and SR systems (mmol s^{-1})

	Reformer	AFB	PROX	WIs	FC cathode	Total
Fuel						
ATR	2.85	–	–	–	–	2.85
SR	2.15	0.47	–	–	–	2.62
Air						
ATR	82.5	51.7	4.6	–	312.2	451.0
SR	–	172.7	4.9	–	312.3	489.9
Water						
ATR	102.6	–	–	61.0	–	163.6
SR	103.2	–	–	42.0	–	145.2

Table 2
Comparison of the main reactors outlet composition (vol.%)

	Reformer		HTWGS		LTWGS		PROX		FC anode inlet	
	ATR	SR	ATR	SR	ATR	SR	ATR	SR	ATR	SR
H_2	31.4	49.9	34.8	52.4	34.5	52.0	31.7	47.1	36.4	55.9
CO	8.7	10.6	1.4	2.1	0.2	0.3	–	–	–	–
H_2O	26.3	30.3	27.0	29.8	29.0	30.9	33.3	35.5	23.4	23.4
CO_2	8.7	9.2	14.3	15.7	14.8	16.8	14.0	15.7	16.0	18.6
N_2	24.9	–	22.5	–	21.5	–	21.0	1.7	24.2	2.1

Table 3
Comparison of the water balance for the ATR and SR systems

	ATR (mmol s^{-1})	SR (mmol s^{-1})
Consumption		
Reformer	−102.6	−103.2
WI1	−28.0	−19.0
WI2	−13.0	−8.0
WI3	−20.0	−15.0
Recovery		
WS1	+42.0	+35.0
WS2	+83.0	+83.0
WS3	+25.0	+25.0
WS4	+33.5	+11.0
Difference	+19.9	+8.8
Balance	+12.2%	+6.1%

Table 4
Efficiency comparison for PEMFC with MEAs not tolerant to CO ($\eta_{FC} = 50\%$)

	P from diesel fuel (kW)	P from generated H_2 (kW)	Electrical P generated (kW)	FP efficiency (%)	APU efficiency (%)
ATR	28.4	25.2	10.1	88.8	35.5
SR	26.1	25.2	10.1	96.6	38.7

Table 5
Efficiency comparison for PEMFC with MEAs tolerant to CO ($\eta_{FC} = 47\%$)

	P from diesel fuel (kW)	P from generated H_2 (kW)	Electrical P generated (kW)	FP efficiency (%)	APU efficiency (%)
ATR	29.1	26.8	10.1	92.1	34.7
SR	27.5	27.1	10.2	98.4	37.1

The water management is shown in Table 3: the water is recovered from points WS1/2/3/4 in the FP schemes. For sake of simplicity, the water recovered from the FC exhaust cathode air (WS2) is only that produced by the electrochemical reactions. The water recovery is easier for the ATR system than for the SR one. The AFB of the SR system, in fact, works with very high air excess (+215%) to better control the maximum allowed temperature, which cannot exceed 850–900 °C. As a consequence, due to the high amount of nitrogen coming out from AFB, the water molar fraction in the AFB flue gases is lower and the water recovery at the radiator outlet temperature of 70 °C is therefore less.

The efficiency comparison is shown in Table 4: the SR system enables a slightly higher APU efficiency, 38.7%, versus the 35.5% of the ATR one. Also the FP efficiency of the SR system results higher, 96.6%, in comparison with the 88.8% of the ATR one. The parasitic losses affecting the APU efficiency are mainly due only to the air compressor and are comparable for the two FP systems: the SR system presents a higher total air flow (+8%) respect to the ATR one, but it is characterised by a lower total pressure drops (−10%) which requires a comparatively lower air pressure from the compressor. On the other hand, taking into consideration the system complexity, the APU with ATR reforming would be preferable since it does not make use of the integrated reactor SR + AFB.

In case of an APU with innovative MEAs for PEMFCs able to tolerate a target value of thousands of CO ppm, the CO-PROX reactor is not necessary any more. The obtained results are very similar to the above reported ones; for sake of simplicity, the various tables (flow rates, inlet/outlet compositions and water balance) are not reported. The results shown in Table 5, where the efficiency comparison for the innovative PEMFCs are listed, are instead very interesting: as a first observation, to obtain the same electrical power output, a larger fuel flow rate is necessary for both systems; this is mainly related to the lower FC efficiency. In complete analogy with the non-CO tolerant PEMFCs, the SR system ends up to be more efficient, as concerns APU (37.1% versus the 34.7% value of the ATR one) and FP efficiency (98.4% with respect to 92.1% of the ATR one). However, for both systems, the APU efficiency values are about one percentage point less than those of the former case: this is basically due to the reduction of PEMFC efficiency. Conversely, in both systems, the FP efficiency values increase as compared to the former case, thanks to the saved H_2 amount, no more oxidised by the CO-PROX unit.

The advantage, in this case, is related to the higher plant simplicity, due to the removal of the CO-PROX reactor (and related water injection unit before the reactor): the more the PEMFC CO tolerance limit increases, the more the FP plant complexity is reduced and a single medium temperature WGS reactor (MTWGS), possibly working between 300 and 350 °C, can be adopted. Another advantage is related to the recovered CO from the FC anode as fuel for the AFB.

As for the risk of soot formation, the FP based on ATR process is less critical due to the contemporary feed of air and steam. To avoid the risk of soot formation in the FP based on SR process, the key parameter is the steam-to-carbon ratio: the steam injected in the reformer hampers coke formation over the catalyst surface (known to be rather severe with diesel oils) [21,22]. As a consequence, this value should be as high as possible: in the SR FP, in fact, such a value has been assumed equal to 3.0, as opposed to the 2.25 value considered for the ATR one.

4. Conclusions

Table 6 shows a summary of pros and cons of the two ATR and SR systems in case of non-CO tolerant PEMFCs. The FP based on the SR scheme appears superior in terms of FP and APU efficiency and hydrogen FC inlet concentration, notwithstanding a slightly higher plant complexity. A more simplified

Table 6
ATR and SR FP: pros and cons comparison

	H_2 concentration to FC anode	Process scheme complexity	Water balance	FP efficiency	APU efficiency
ATR	−	+	++	−	−
SR	++	−	+	+	+

++: excellent; +: good; −: bad.

FP scheme could be adopted, when PEMFC MEAs with stable increasing CO tolerance and not penalising the FC efficiency will be developed: MEAs CO tolerance and FP plant complexity move in opposite directions and a trade-off has likely to be reached. However, for the time being, such optimised solution cannot be defined and significant improvements are still awaited for from MEAs manufacturers. Only the future will disclose which will be the winning key factor for the development of APU based on PEMFCs technology.

References

[1] Hydrogen Energy and Fuel Cells, Special Report, European Commission, EUR 20719 EN, 2003.
[2] R.A. Hefner, Int. J. Hydrogen Energy 20 (1995) 945.
[3] H. Zhu, C. Li, X. Li, C. Xu, Z. Mao, J. Liary, D. Wu, Mater. Lett. 57 (2002) 32.
[4] H. Zhu, A. Cao, X. Li, C. Xu, Z. Mao, D. Ruan, Appl. Surf. Sci. 178 (2001) 50.
[5] Kyoto Protocol to the United Nations Framework Convention on Climate Change English Conference of the Parties, Third Session Kyoto, 1997.
[6] D.L. Trimm, Catal. Today 49 (1999) 3.
[7] K. Opoku-Gyamfi, Z.M. Tafreshi, A.A. Adesina, React. Kinet. Catal. Lett. 64 (1998) 229.
[8] L. Hang, R. Westerholm, M. Sjogren, U. Rannug, Fuel 74 (1995) 983.
[9] A.K. Avci, D.L. Trimm, Z.I. Önsan, Appl. Catal. A 90 (2002) 77.
[10] K. Opoku-Gyamfi, A.A. Adesina, Appl. Catal. A 180 (1999) 113.
[11] S. Freni, G. Calogero, S. Cavallaro, J. Power Sources 87 (2000) 28.
[12] M.L. Cubeiro, J.L.G. Fierro, Appl. Catal. A 168 (1998) 307.
[13] L. Ma, D.L. Trimm, C. Jiang, Appl. Catal. A 138 (1996) 275.
[14] T.V. Choudary, D.W. Goodman, Catal. Today 7 (2002) 65.
[15] F. Han, M. Kahalich, M. Kinne, R.J. Behm, Phys. Chem. Chem. Phys. 4 (2002) 389.
[16] S.H. Oh, R.M. Sinkevitch, J. Catal. 142 (1993) 254.
[17] C.D. Dudfield, R. Chen, P.L. Adcock, Int. J. Hydrogen Energy 26 (2001) 763.
[18] D.C. Papageorgopoulos, M. Keijzer, F.A. de Bruijn, Electr. Acta 48 (2002) 197.
[19] D. Newsome, Catal. Rev. Sci. Eng. 21 (1980) 275.
[20] I. Rosso, C. Galletti, G. Saracco, E. Garrone, V. Specchia, Appl. Catal. B 48 (2004) 195.
[21] T.J. Campbell, A.H. Shaaban, F.H. Holcomb, R. Salavani, M.J. Binder, J. Power Sources 129 (2004) 81.
[22] K. Pinkwart, T. Bayha, W. Lutter, M. Krausa, J. Power Sources 136 (2004) 211.